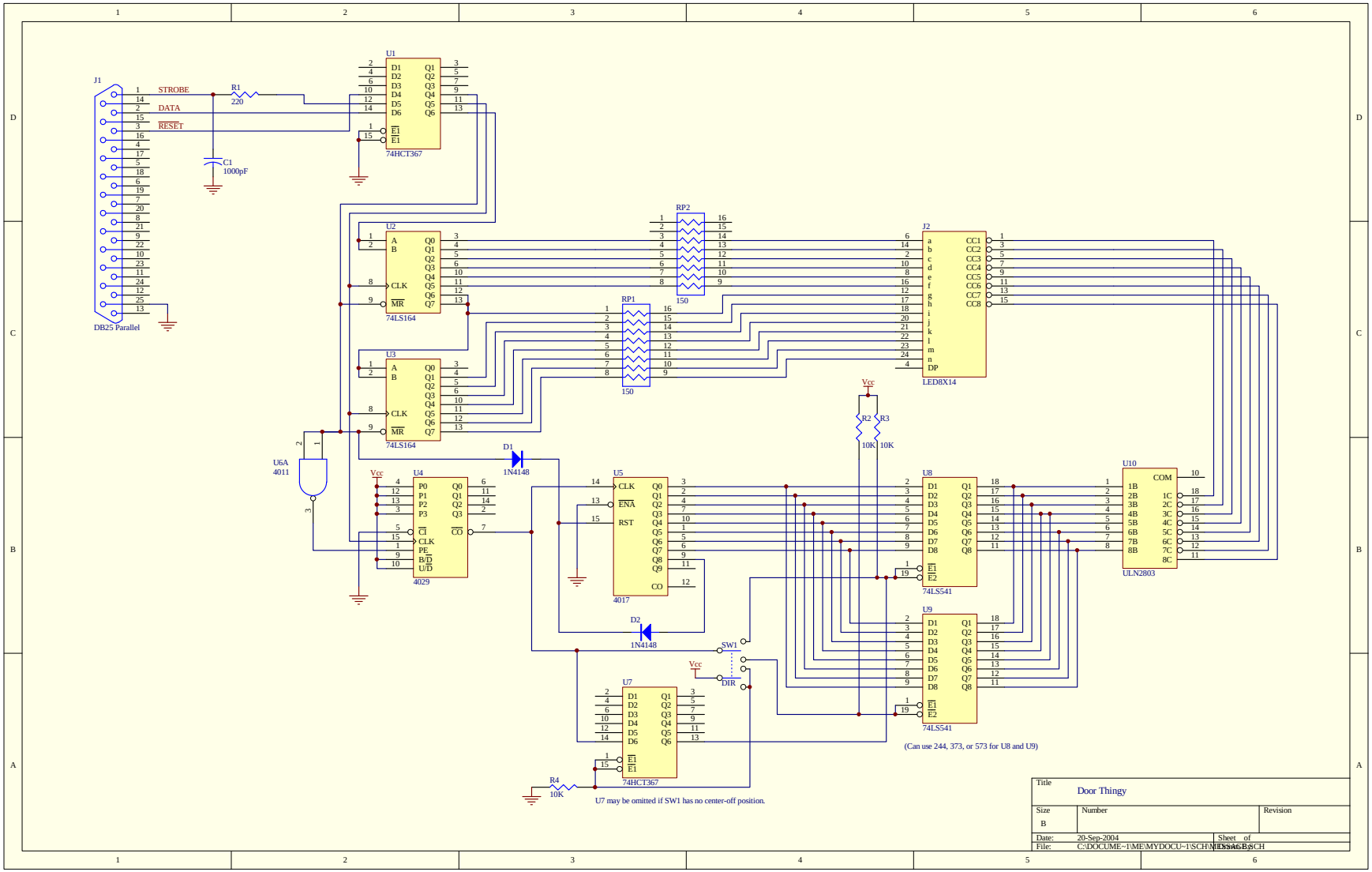
J1
DB25 Parallel
STROBE
DATA
RESET
R1
220
C1
1000pF
U1
74HCT367
U2
74LS164
U3
74LS164
RP1
150
RP2
150
J2
LED8X14
U6A
4011
Vcc
U4
4029
D1
1N4148
U5
4017
D2
1N4148
SW1
DIR
U7
74HCT367
R4
10K
U7 may be omitted if SW1 has no center-off position.
R2
R3
10K
10K
U8
74LS541
U9
74LS541
(Can use 244, 373, or 573 for U8 and U9)
U10
ULN2803
Title
Door Thingy
Size
B
Number
Revision
Date:
20-Sep-2004
Sheet of
File:
C:\DOCUME~1\ME\MYDOCU~1\SCH\MEDIA.SCH