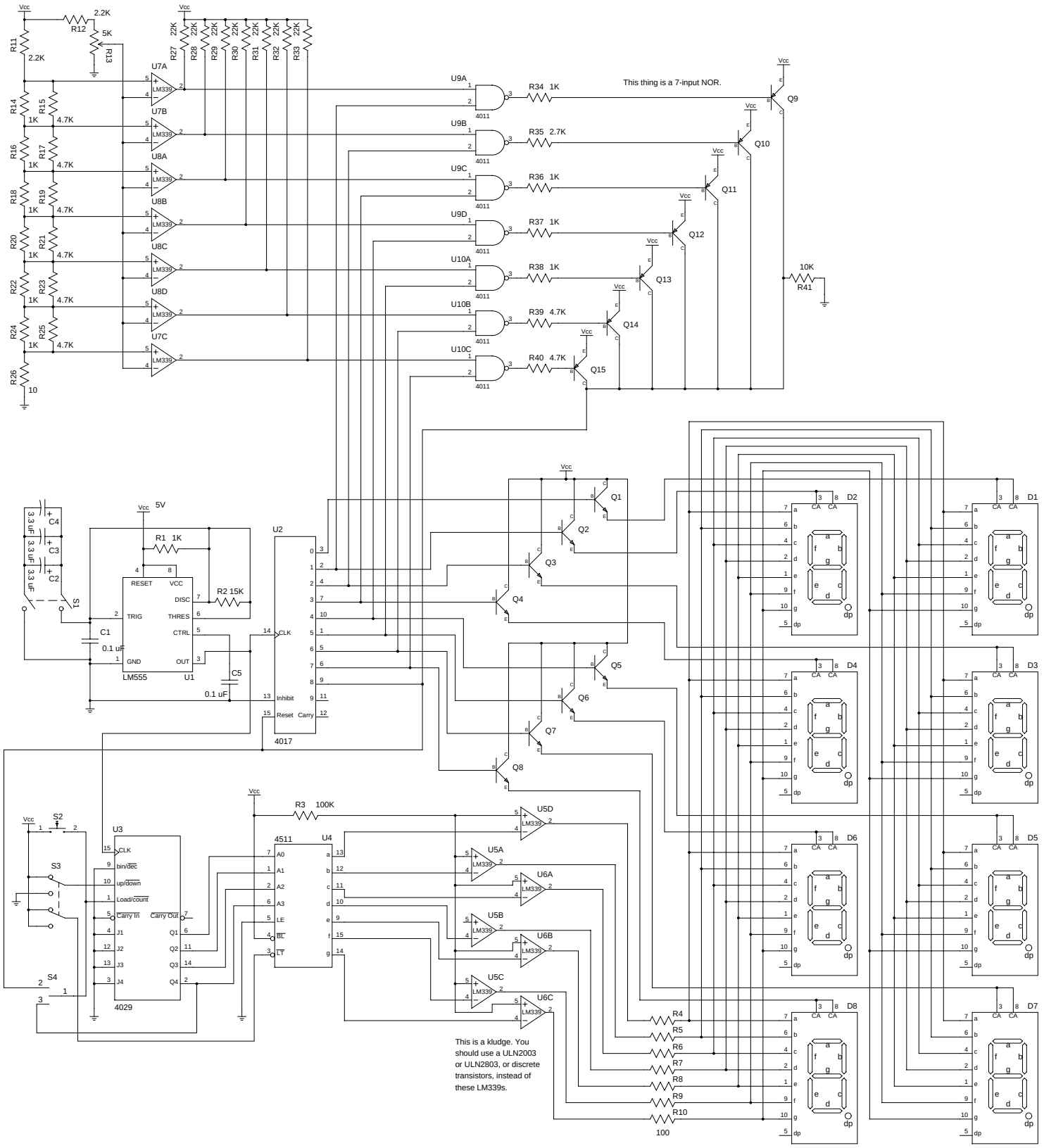
This thing is a 7-input NOR.
This is a kludge. You should use a ULN2003 or ULN2803, or discrete transistors, instead of these LM339s.
LM555
4017
4029
4511
4011
LM339
Vcc
5V